Collegio Italiano dei
Consulenti in Proprietà Industriale

Paper C EQE 2019

Milano, 7 novembre 2019

by Ing. Sara Morabito – Cantaluppi & Partners
and Ing. Giulia Pietra – Marchi & Partners

FICPI
FÉDÉRATION INTERNATIONALE DES CONSEILS EN PROPRIÉTÉ INTELLECTUELLE
INTERNATIONAL FEDERATION OF INTELLECTUAL PROPERTY ATTORNEYS
INTERNATIONALE FEDERATION VON PATENTANWÄLTEN

DISCLAIMER

- The following presentation contains private opinions of the tutor. It is intended to provide the best advice according to the knowledge of the tutor.
- Each paper is different, and there is no single „methodology“ guaranteed to yield the correct solution of the paper. The best methodologies are called „knowledge“ and „common sense“.
- This presentation is not intended as a „methodology”

WHAT DO YOU RECEIVE?

- Client´s letter
- Annex 1 – patent to be opposed
- Annexes A2 to A? (typically A2 to A6) – documents provided by the client, can be used in attacking the Annex 1

WHAT ARE YOU REQUIRED TO PREPARE?

- A notice of opposition against Annex 1
- Attack all claims that can be attacked
- Art. 100(a) grounds: not patentable under Art. 52-57
- Art. 100(c) grounds: added subject-matter
- Do NOT use Art. 100(b) ground

STEPS

1. Read the client's letter
2. Establish the number of claims and their dependency
3. Establish effective dates of the claims
4. Establish dates of the prior art annexes and their usability
5. Read the claims
6. Read and analyze Annex 1
7. Read and analyze prior art annexes A2 – AX (X = 5 or 6 typically)
8. Establish attacks
9. Draft the Notice of Opposition

THE OPPONENT'S LETTER

- Opposition to be filed in the name of the company
- The patent to be opposed claims priority from NL patent application; priority document and European patent application as filed are identical, except for claims 6 and 7 and par. [0017] and [0018]
- Claim 1 was amended during examination

ANNEX 1 (I)

FIRST ASPECT OF THE INVENTION – LIGHTWEIGHT IRONING DEVICE WITH IMPROVED GLIDING PROPERTIES

[0006] Therefore in a first aspect of the invention we have developed a coating on the ironing side of an aluminium soleplate with the aim of protecting it against deterioration. A particular type of ceramic coating, the Kera type coating, e.g. KeraTix, KeraSi or KeraMa, has been found to be particularly suitable for that purpose. In addition we have found that this coating, or layer, can be easily applied to an aluminium soleplate, optionally on top of an intermediate coating. The intermediate coating provides good adhesion between the aluminium soleplate and the Kera type coating. Furthermore our tests show that a KeraMa coating improves gliding.

[0007] For steam irons, we apply KeraMa to an intermediate coating of Yur56. […]

ANNEX 1 (II)

FIRST ASPECT OF THE INVENTION – MORE UNIFORM DISTRIBUTION OF STEAM

[0009] Steam is released from steam outlets 2, also called steam nozzles, formed in the soleplate. […] there is a need to improve steam distribution to the fabric. Grooves 3, i.e. open channels, in the form of shallow, elongated recesses starting at the steam outlets 2 address this problem by allowing the steam to be distributed over the surface of the soleplate beyond the area of the outlets 2 to a bigger surface area of the fabric.

[0010] The grooves can be made by various processes, such as cold working of the metallic soleplate, or casting the molten metal in a permanent mould having the required shape for obtaining a soleplate with grooves and using forced-air cooling. Among the available processes of casting in a permanent mould, low-pressure die casting, which means filling the mould by means of an overpressure of 0.5 bar, is preferred because it can easily be implemented. Coatings are subsequently deposited onto the grooved soleplate.

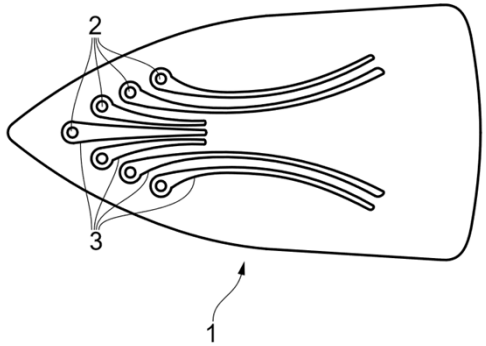

FIG. 1

ANNEX 1 (III)

SECOND ASPECT OF THE INVENTION – PREVENTING WASTE OF STEAM

[0012] The iron according to the second aspect of the invention is provided with a region at the tip of the soleplate with a high density of steam outlets together with a region at the back of the soleplate without steam outlets. This distribution of steam outlets has proved effective in preventing waste of steam. In the technical field of ironing devices, a high density corresponds to at least five outlets per ten square centimetres of surface.

[0013] Figure 2 represents the soleplate 11 of an iron according to the second aspect of the invention. The soleplate 11 has a longitudinal axis (XX'), a tip region 14 with a high density of steam outlets 12 and a back region 15 without outlets.

[0014] With region 14 at the tip of the soleplate 11 and region 15 at the back of the soleplate 11, efficient use of steam is achieved. Therefore good ironing quality can be obtained with a low steam-flow rate.

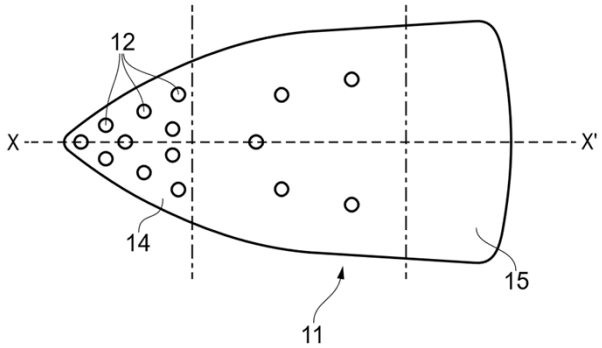

FIG. 2

ANNEX 1 (IV)

SECOND ASPECT OF THE INVENTION – NO DAMAGE TO DELICATE FABRICS

[0015] In a preferred embodiment of the iron according to the second aspect of the invention, the steam dispensing system is designed to avoid damaging delicate fabrics. […]

[0016] To overcome this problem, the present embodiment provides tilted ducts, each having a longitudinal axis inclined at an angle of between 25° and 35° with respect to the ironing surface of the soleplate. The steam thus partly flows along the surface of the fabric instead of being forced through the fabric. The integrity of delicate fabrics is maintained. Choosing a smaller angle, and thus longer ducts, would make it more difficult to manufacture the ducts. A much bigger angle would not sufficiently reduce the risk of damaging delicate fabrics. An angle of between 25° and 35° has been found to give the best results.

ANNEX 1 (V)

SECOND ASPECT OF THE INVENTION – FAST IRONING

[0017] In the iron according to the second aspect of this invention, an unexpected effect is obtained when the region devoid of steam outlets extends at least 4 cm along the longitudinal axis (XX') of the soleplate. Where this is the case, a large hot surface at the back of the soleplate is brought into contact with the fabric, which speeds up the ironing process to a surprising degree.

SECOND ASPECT OF THE INVENTION – EASIER REFILL

[0018] This iron also preferably comprises an opening in the back of the iron. The water tank can be filled through this opening. There is more space for the opening in the back than on the top of the iron, which is usually narrow and cluttered with temperature and steam control buttons. Hence an opening in the back can be made bigger to allow for easier refilling of the water tank. […]

CLAIMS OF ANNEX I (I)

1. Ironing device comprising an aluminium soleplate (1) coated on its ironing side with a Kera type layer, the Kera type layer being a KeraMa layer and/or a KeraSi layer.

2. Ironing device according to claim 1 being a steam iron wherein the coating on the ironing side of the soleplate (1) comprises, starting from the soleplate (1) in this order, a Yur56 layer and a KeraMa layer as the Kera type layer.

3. Ironing device according to claim 2, wherein the soleplate (1) comprises steam outlets (2) and grooves (3) starting from the steam outlets (2) to distribute the steam, and wherein the grooves (3) are obtainable by low-pressure die casting and forced-air cooling.

CLAIMS OF ANNEX I (II)

4. Steam iron with an internal water tank and a soleplate (11) with steam outlets (12), wherein the soleplate (11) comprises a region (14) at the tip of the soleplate (11) with a high density of steam outlets (12) and a region (15) at the back of the soleplate (11) devoid of steam outlets.

5. Steam iron according to claim 4, wherein the steam outlets (12) are part of steam dispensing ducts each having a longitudinal axis inclined at an angle of between 25° and 35° with respect to the ironing surface of the soleplate (11).

6. Steam iron according to claim 4, wherein the region (15) at the back of the soleplate (11) extends at least 4 cm along the longitudinal axis (XX') of the soleplate (11).

7. Steam iron according to claim 6 with an opening in the back of the iron through which the water tank can be filled.

FROM CLAIMS TO CLAIM OBJECTS

CLAIMS		CLAIM OBJECTS
1 (independent)	KeraMa	1 (KMa)
	KeraSi	1 (KSi)
	KeraMa and KeraSi	1 (KMa+KSi)
2 (dependent from claim 1)		1+2
3 (dependent from claim 2)		1+2+3
4 (independent)		4
5 (dependent from claim 4)		4+5
6 (dependent from claim 4)		4+6
7 (dependent from claim 6)		4+6+7

6 (independent)

EFFECTIVE DATES

CLAIM OBJECTS		PRIORITY DATE 14.11.2014	DATE OF FILING 14.11.2015	NO EFFECTIVE DATE
1 (KMa)	contained in priority document	X		
1 (KSi)	contained in priority document	X		
1 (KMa+KSi)	contained neither in priority document nor in application as filed			X
1+2	contained in priority document	X		
1+2+3	contained in priority document	X		
4	contained in priority document	X		
4+5	contained in priority document	X		
4+6	NOT contained in priority document		X	
4+6+7	NOT contained in priority document		X	

USABILITY OF PRIOR DOCUMENTS

CLAIM OBJECTS	A2	A4	A5	A6	PRIORITY DATE 14.11.2014	A3 (US)	DATE OF FILING 14.11.2015	NO EFFECTIVE DATE
	21.07.2000	1994	17.12.2009	19.10.2005		12.02.2015		
1 (KMa)					X			
1 (KSi)					X			
1 (KMa+KSi)								X
1+2					X			
1+2+3					X			
4					X			
4+5					X			
4+6							X	
4+6+7							X	

DETERMINE ATTACKS (I)

CLAIM OBJECTS	Art. 123(2)	Art. 54(2)	Art. 54(3)	Art. 56
1 (KMa)				
1 (KSi)				
1 (KMa+KSi)	X			
1+2				
1+2+3				
4				
4+5				
4+6				
4+6+7				

READING ANNEX I (I)

CLAIM 1	TECHNICAL EFFECTS AND DEFINITIONS
Ironing device comprising	press or hand iron (iron) (par. [0001]), dry irons or steam irons (par. [0002])
an aluminium soleplate (1)	DEF: soleplate = baseplate (par. [0001]) DEF: aluminium is a low density material (par. [0005]) TE: allows production of lightweight ironing devices (par. [0005])
coated on its ironing side with a Kera type layer,	DEF: coating = layer (par. [0006]) Kera type coating e.g. KeraTix, KeraSi or KeraMa (par. [0006]) TE: protects against deterioration, easily applied to aluminium (par. [0006])
the Kera type layer being a KeraMa layer	TE: improves gliding (par. [0006])
or a KeraSi layer	

READING ANNEX I (II)

CLAIM 2	TECHNICAL EFFECTS AND DEFINITIONS
a steam iron	steam iron always comprises means for containing water, means for generating steam and means for dispensing steam (par. [0002])
wherein the coating on the ironing side of the soleplate (1) comprises, starting from the soleplate (1) in this order, a Yur56 layer	TE: improves adhesion aluminium/Kera type layer (par. [0006])
and a KeraMa layer as the Kera type layer.	TE: improves gliding (par. [0006])

CLAIM 3	TECHNICAL EFFECTS AND DEFINITIONS
the soleplate (1) comprises steam outlets (2)	DEF: steam outlets = steam nozzles (par. [0009])
and grooves (3) starting from the steam outlets (2) to distribute the steam,	DEF: grooves = open channels (par. [0009]) TE: uniform distribution of steam over fabric, integrity of delicate fabrics maintained (par. [0009])
and wherein the grooves (3) are obtainable by low-pressure die casting and forced-air cooling.	DEF: low pressure die casting = filling the mould by means of an overpressure of 0.5 bar (par. [0010]) TE: low pressure die casting easily implemented (par. [0010])

READING ANNEX I (III)

CLAIM 4	TECHNICAL EFFECTS AND DEFINITIONS
Steam iron	steam iron always comprises means for containing water, means for generating steam and means for dispensing steam (par. [0002])
with an internal water tank	domestic use - small capacity (par. [0011])
and a soleplate (11) with steam outlets (12),	DEF: soleplate = baseplate (par. [0001]) DEF: steam outlets = steam nozzles (par. [0009])
wherein the soleplate (11) comprises a region (14) at the tip of the soleplate (11) with a high density of steam outlets (12) and a region (15) at the back of the soleplate (11) devoid of steam outlets.	DEF: high density = at least 5 outlets per 10 square cm (par. [0012]) TE: efficient use of steam (par. [0011]-[0014])

READING ANNEX I (IV)

CLAIM 5	TECHNICAL EFFECTS AND DEFINITIONS
the steam outlets (12) are part of steam dispensing ducts	
each having a longitudinal axis inclined at an angle of between 25° and 35° with respect to the ironing surface of the soleplate (11).	TE: steam partly flows along surface of fabric; avoid damaging delicate fabrics (par. [0015]-[0016])

CLAIM 6	TECHNICAL EFFECTS AND DEFINITIONS
the region (15) at the back of the soleplate (11) extends at least 4 cm along the longitudinal axis (XX') of the soleplate (11)	TE: speeds up the ironing process at a surprising degree (par. [0017])

CLAIM 7	TECHNICAL EFFECTS AND DEFINITIONS
an opening in the back of the iron through which the water tank can be filled.	TE: opening can be made bigger, easier refilling of the water tank (par. [0018])

ANNEX 2

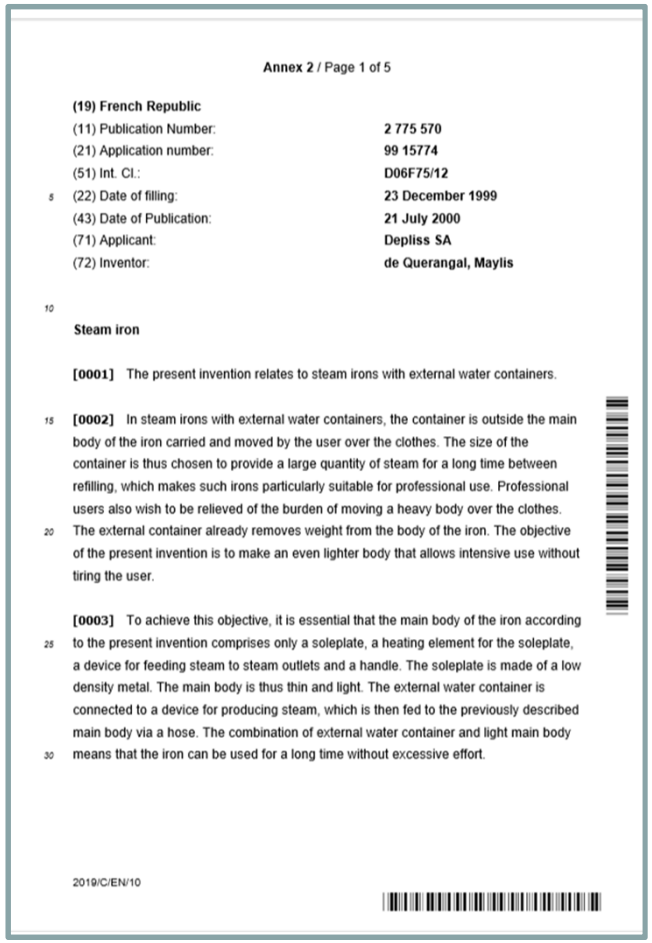

Annex 2 / Page 1 of 5

(19) French Republic

(11) Publication Number:	2 775 570
(21) Application number:	99 15774
(51) Int. Cl.:	D06F75/12
(22) Date of filing:	23 December 1999
(43) Date of Publication:	21 July 2000
(71) Applicant:	Depliss SA
(72) Inventor:	de Querangal, Maylis

Steam iron

[0001] The present invention relates to steam irons with external water containers.

[0002] In steam irons with external water containers, the container is outside the main body of the iron carried and moved by the user over the clothes. The size of the container is thus chosen to provide a large quantity of steam for a long time between refilling, which makes such irons particularly suitable for professional use. Professional users also wish to be relieved of the burden of moving a heavy body over the clothes. The external container already removes weight from the body of the iron. The objective of the present invention is to make an even lighter body that allows intensive use without tiring the user.

[0003] To achieve this objective, it is essential that the main body of the iron according to the present invention comprises only a soleplate, a heating element for the soleplate, a device for feeding steam to steam outlets and a handle. The soleplate is made of a low density metal. The main body is thus thin and light. The external water container is connected to a device for producing steam, which is then fed to the previously described main body via a hose. The combination of external water container and light main body means that the iron can be used for a long time without excessive effort.

2019/C/EN/10

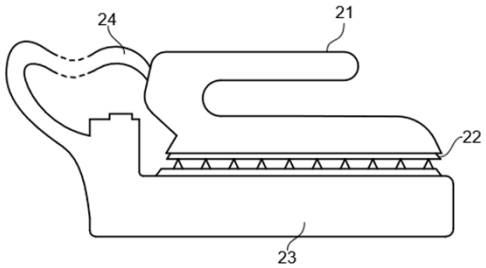

FIG. 1

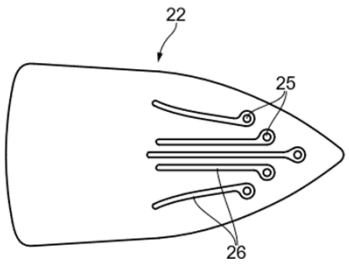

FIG. 2

PROFESSIONAL STEAM IRON WITH EXTERNAL WATER CONTAINER

- external water container to make iron body <u>lighter</u>
- iron <u>even lighter by use of low density material</u>
- first embodiment: higher density of steam outles at the tip, no outlets at the back
- second embodiment: open channels to distribute steam
- both embodiments: Yur56 and KeraTix

READING ANNEX 2 (I)

CLAIM 1	TECHNICAL EFFECTS AND DEFINITIONS	Annex 2
Ironing device comprising	press or hand iron (iron), dry irons or steam irons	steam iron (title)
an aluminium soleplate (1)	DEF: soleplate = baseplate DEF: aluminium is a low density material TE: allows production of lightweight ironing devices	soleplate made of low density material (par. [0003]) - aluminium not disclosed same TE (par. [0003])
coated on its ironing side with a Kera type layer,	DEF: coating = layer Kera type coating e.g. KeraTix, KeraSi or KeraMa TE: protects against deterioration, easily applied to aluminium	coated with Kera type layer (par. [0014])
the Kera type layer being a KeraMa layer	TE: improves gliding	KeraTix (par. [0014]) TE: aestethically appealing glossy finish (par. [0014])
or a KeraSi layer		KeraTix (par. [0014]) TE: aestethically appealing glossy finish (par. [0014])

READING ANNEX 2 (II)

CLAIM 2	TECHNICAL EFFECTS AND DEFINITIONS	Annex 2
a steam iron		steam iron (title)
wherein the coating on the ironing side of the soleplate (1) comprises, starting from the soleplate (1) in this order, a Yur56 layer	TE: improves adhesion aluminium/Kera type layer	Yur56 (par. [0014])
and a KeraMa layer as the Kera type layer.	TE: improves gliding	KeraTix TE: aestethically appealing glossy finish (par. [0014])

CLAIM 3	TECHNICAL EFFECTS AND DEFINITIONS	Annex 2
the soleplate (1) comprises steam outlets (2)	DEF: steam outlets = steam nozzles	steam outlets (par. [0004])
and grooves (3) starting from the steam outlets (2) to distribute the steam,	DEF: grooves = open channels TE: uniform distribution of steam over fabric, integrity of delicate fabrics maintained	open channels extending from the outlets (par. [0011]) same TE (par. [0011])
and wherein the grooves (3) are obtainable by low-pressure die casting and forced-air cooling.	DEF: low pressure die casting = filling the mould by means of an overpressure of 0.5 bar TE: low pressure die casting easily implemented	counterpressure die casting at 4 bars followed by forced air-cooling (par. [0012])

READING ANNEX 2 (III)

CLAIM 4	TECHNICAL EFFECTS AND DEFINITIONS	Annex 2
Steam iron		steam iron (title)
with an internal water tank	domestic use - small capacity	external water tank - professional use (par. [0002]) TE: removes weight from iron
and a soleplate (11) with steam outlets (12),	DEF: soleplate = baseplate DEF: steam outlets = steam nozzles	soleplate 22 with steam outlets (par. [0004])
wherein the soleplate (11) comprises a region (14) at the tip of the soleplate (11) with a high density of steam outlets (12) and a region (15) at the back of the soleplate (11) devoid of steam outlets.	DEF: high density = at least 5 outlets per 10 square cm TE: efficient use of steam	higher density at the tip of the soleplate (3-4 outlets in 5 square cm of surface) and lower density (or no outlets) and the back (par. [0007]-[0008]) same TE (par. [0009])

READING ANNEX 2 (IV)

CLAIM 5	TECHNICAL EFFECTS AND DEFINITIONS	Annex 2
the steam outlets (12) are part of steam dispensing ducts		
each having a longitudinal axis inclined at an angle of between 25° and 35° with respect to the ironing surface of the soleplate (11).	TE: steam partly flows along surface of fabric; avoid damaging delicate fabrics	

CLAIM 6	TECHNICAL EFFECTS AND DEFINITIONS	Annex 2
the region (15) at the back of the soleplate (11) extends at least 4 cm along the longitudinal axis (XX') of the soleplate (11)	TE: speeds up the ironing process at a surprising degree	

CLAIM 7	TECHNICAL EFFECTS AND DEFINITIONS	Annex 2
an opening in the back of the iron through which the water tank can be filled.	TE: opening can be made bigger, easier refilling of the water tank	flexible hose 24 connected at the back for feeding steam - not water (par. [0004])

ANNEX 3

(19) United States
(12) Patent Application Publication
(10) Publication Number: US 2015/0042569
(21) Application number: 13/964,145
(51) Int. Cl.: D06F75/14
(22) Date of filing: 08 August 2013
(43) Date of Publication: 12 February 2015
(71) Applicant: Elecx, Columbus, GA (US)
(72) Inventor: Casischke, Laura

Steam iron

[0001] The present invention relates to a steam iron with an internal water container. Such a device is easy to use, although its limited steam flow rate may make it cumbersome and time-consuming to iron heavy fabrics like denim.

[0002] It is highly desirable to be able to iron with ease all types of fabrics, including denim, a fabric used ever more widely for clothes. Hence we have developed a steam iron with an internal water container with the aim of efficiently ironing all types of fabrics, in particular fabrics which are heavy and difficult to iron.

[0003] The iron of the present invention comprises a combination of useful features: first the tip of the baseplate has a high density of steam nozzles while the back of the baseplate has no steam nozzles. Hence steam is dispensed where it is really needed.

[0004] In addition at least one rib protruding from the ironing side of the baseplate further improves the ironing efficiency for heavy fabrics.

[0005] A reason for this effect may be that the ribs apply more pressure to the fabric being ironed than the rest of the baseplate, thereby fully relaxing tensions in the fabric.

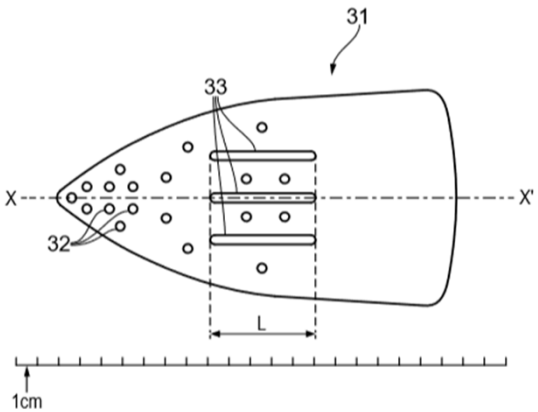

FIG.

STEAM IRON WITH INTERNAL WATER CONTAINER

- Improve ironing efficiency of heavy fabrics (denim)
- higher density of steam nozzles at the tip, no nozzles at the back
- Figure in scale
- soleplate made by counterpressure die casting followed by forced-air cooling

READING ANNEX 3 (I)

CLAIM 1	TECHNICAL EFFECTS AND DEFINITIONS	Annex 3
Ironing device comprising	press or hand iron (iron), dry irons or steam irons	steam iron (title)
an aluminium soleplate (1)	DEF: soleplate = baseplate DEF: aluminium is a low density material TE: allows production of lightweight ironing devices	
coated on its ironing side with a Kera type layer,	DEF: coating = layer Kera type coating e.g. KeraTix, KeraSi or KeraMa TE: protects against deterioration, easily applied to aluminium	
the Kera type layer being a KeraMa layer	TE: improves gliding	
or a KeraSi layer		

READING ANNEX 3 (II)

CLAIM 2	TECHNICAL EFFECTS AND DEFINITIONS	Annex 3
a steam iron		steam iron (title)
wherein the coating on the ironing side of the soleplate (1) comprises, starting from the soleplate (1) in this order, a Yur56 layer	TE: improves adhesion aluminium/Kera type layer	
and a KeraMa layer as the Kera type layer.	TE: improves gliding	

CLAIM 3	TECHNICAL EFFECTS AND DEFINITIONS	Annex 3
the soleplate (1) comprises steam outlets (2)	DEF: steam outlets = steam nozzles	baseplate 31 comprises steam nozzles 32 (par. [0008])
and grooves (3) starting from the steam outlets (2) to distribute the steam,	DEF: grooves = open channels TE: uniform distribution of steam over fabric, integrity of delicate fabrics maintained	grooves delimited by ribs 33 (Fig., par. [0009]) TE: ribs improve ironing efficiency for heavy fabric (par. [0004])
and wherein the grooves (3) are obtainable by low-pressure die casting and forced-air cooling.	DEF: low pressure die casting = filling the mould by means of an overpressure of 0.5 bar TE: low pressure die casting easily implemented	counterpressure die casting at up to 10 bars and low pressure die-casting have been available for some years, both followed by air-forced cooling. Microstructure of metal determined only by forced air-cooling (par. [0007])

READING ANNEX 3 (III)

CLAIM 4	TECHNICAL EFFECTS AND DEFINITIONS	Annex 3
Steam iron		steam iron (title)
with an internal water tank	domestic use - small capacity	with internal water container (par. [0001]) but applicable also to other types of ironing devices (par. [0011])
and a soleplate (11) with steam outlets (12),	DEF: soleplate = baseplate DEF: steam outlets = steam nozzles	baseplate 31 comprises steam nozzles 32 (par. [0008])
wherein the soleplate (11) comprises a region (14) at the tip of the soleplate (11) with a high density of steam outlets (12) and a region (15) at the back of the soleplate (11) devoid of steam outlets.	DEF: high density = at least 5 outlets per 10 square cm TE: efficient use of steam	tip with high density of nozzles, back with no steam nozzles (par. [0003], [0008], [0010]) TE: better moistening of heavy fabrics (par. [0008)]

READING ANNEX 3 (IV)

CLAIM 5	TECHNICAL EFFECTS AND DEFINITIONS	Annex 3
the steam outlets (12) are part of steam dispensing ducts		
each having a longitudinal axis inclined at an angle of between 25° and 35° with respect to the ironing surface of the soleplate (11).	TE: steam partly flows along surface of fabric; avoid damaging delicate fabrics	

CLAIM 6	TECHNICAL EFFECTS AND DEFINITIONS	Annex 3
the region (15) at the back of the soleplate (11) extends at least 4 cm along the longitudinal axis (XX') of the soleplate (11)	TE: speeds up the ironing process at a surprising degree	ribs have length of 5 cm, no steam nozzles in the region beyond the ribs (Fig. in scale and par. [0009]-[0010]) TE: outstandingly effective on denim (par. [0010])

CLAIM 7	TECHNICAL EFFECTS AND DEFINITIONS	Annex 3
an opening in the back of the iron through which the water tank can be filled.	TE: opening can be made bigger, easier refilling of the water tank	

ANNEX 4

Properties of coated metallic baseplates of dry irons

Wonderful Household 1994, vol.3, p.14-16
Kevin Fabullon, Ph.D, Technical University of Eindhoven

Summary

[0001] Coated baseplates have recently attracted interest from manufacturers of ironing devices. We have measured the impact of different types of coatings on the ironing performance of dry irons. Very encouraging results have been obtained.

Introduction

[0002] Baseplates of irons can be made e.g. of metals or alloys. The bottom side of the baseplate, which comes into contact with the garment to be ironed, must be able to glide well on the garment in order to ease ironing. However, metallic baseplates may be scratched or damaged, which impairs the baseplate gliding. This has prompted manufacturers to look for baseplates that retain their gliding properties for longer, or that have better gliding properties from the outset.

Selection of materials

[0003] Our approach is to coat the bottom side of the baseplate with a material that protects the metal, and preferably enhances gliding. When selecting appropriate materials, we have in particular considered the following aspects: resistance to high temperatures (at least 250°C), availability and cost, as well as compatibility with the metallic baseplate. Suitable coating materials include ceramics, enamels and certain polymers.

Table 1:

	Cotton	Silk
Without coating	2	2
PTFE	3	4
KeraTix	2	3
KeraMa	3	4

Table 2:

	Cotton	Silk
Without coating	2	2
KeraSi	3	3

DRY IRONING DEVICE

- baseplate coated to <u>improve gliding</u>
- first test series: baseplate in aluminium, Yur56 and KeraTix or KeraMa
- second test series: baseplate in Medur alloy, Yur74 and KeraSi

READING ANNEX 4 (I)

CLAIM 1	TECHNICAL EFFECTS AND DEFINITIONS	Annex 4	
Ironing device comprising	press or hand iron (iron), dry irons or steam irons	dry iron (par. [0004])	
an aluminium soleplate (1)	DEF: soleplate = baseplate DEF: aluminium is a low density material TE: allows production of lightweight ironing devices	baseplate of aluminium which is a low density material (par. [0004])	baseplate of Medur alloy, essential element (par. [0007])
coated on its ironing side with a Kera type layer,	DEF: coating = layer Kera type coating e.g. KeraTix, KeraSi or KeraMa TE: protects against deterioration, easily applied to aluminium	KeraTix or KeraMa (par. [0004]) same TE (par. [0003])	KeraSi (par. [0007]) same TE (par. [0003]) not compatible with steam irons (par. [0008)]
the Kera type layer being a KeraMa layer	TE: improves gliding	KeraTix or KeraMa (par. [0004]) same TE (Table I, par. [0008])	
or a KeraSi layer			KeraSi (par. [0007]) same TE (Table 2, par. [0008]) not compatible with steam irons (par. [0008)]

READING ANNEX 4 (II)

CLAIM 2	TECHNICAL EFFECTS AND DEFINITIONS	Annex 4	
a steam iron		dry iron (par. [0004]). Steam irons still to be investigated.	
wherein the coating on the ironing side of the soleplate (1) comprises, starting from the soleplate (1) in this order, a Yur56 layer	TE: improves adhesion aluminium/Kera type layer	Yur56 same TE (par. [0005])	Yur74 not compatible with aluminium (par. [0005])
and a KeraMa layer as the Kera type layer.	TE: improves gliding	KeraTix or KeraMa (par. [0004]) same TE (Table I, par. [0008])	KeraSi (par. [0007]) same TE (Table 2) not compatible with steam irons (par. [0008])

CLAIM 3	TECHNICAL EFFECTS AND DEFINITIONS	Annex 4	
the soleplate (1) comprises steam outlets (2)	DEF: steam outlets = steam nozzles		
and grooves (3) starting from the steam outlets (2) to distribute the steam,	DEF: grooves = open channels TE: uniform distribution of steam over fabric, integrity of delicate fabrics maintained		
and wherein the grooves (3) are obtainable by low-pressure die casting and forced-air cooling.	DEF: low pressure die casting = filling the mould by means of an overpressure of 0.5 bar TE: low pressure die casting easily implemented		

READING ANNEX 4 (III)

CLAIM 4	TECHNICAL EFFECTS AND DEFINITIONS	Annex 4
Steam iron		dry iron (par. [0004])
with an internal water tank	domestic use - small capacity	
and a soleplate (11) with steam outlets (12),	DEF: soleplate = baseplate DEF: steam outlets = steam nozzles	
wherein the soleplate (11) comprises a region (14) at the tip of the soleplate (11) with a high density of steam outlets (12) and a region (15) at the back of the soleplate (11) devoid of steam outlets.	DEF: high density = at least 5 outlets per 10 square cm TE: efficient use of steam	

READING ANNEX 4 (IV)

CLAIM 5	TECHNICAL EFFECTS AND DEFINITIONS	Annex 4
the steam outlets (12) are part of steam dispensing ducts		
each having a longitudinal axis inclined at an angle of between 25° and 35° with respect to the ironing surface of the soleplate (11).	TE: steam partly flows along surface of fabric; avoid damaging delicate fabrics	

CLAIM 6	TECHNICAL EFFECTS AND DEFINITIONS	Annex 4
the region (15) at the back of the soleplate (11) extends at least 4 cm along the longitudinal axis (XX') of the soleplate (11)	TE: speeds up the ironing process at a surprising degree	

CLAIM 7	TECHNICAL EFFECTS AND DEFINITIONS	Annex 4
an opening in the back of the iron through which the water tank can be filled.	TE: opening can be made bigger, easier refilling of the water tank	

ANNEX 5

(19) European Patent Office
(12) European Patent Application
(21) Application number: 08009666.2
(11) Publication number: EP 2 003 547 A1
(22) Date of filing: 27 May 2008
(30) Priority:
(43) Date of Publication: 17 December 2009
(51) Int. Cl.: D06F69/00
(71) Applicant: SFF
(72) Inventor: Resa, Yasmina
(74) Representative: Morisonn, Tony
(84) Designated Contracting States: BE, DE, FR, IE

Steam ironing machine for delicate fabrics

[0001] The present invention relates to a steam ironing machine, such as an ironing press, for handling delicate fabrics without damaging them. While the invention has been developed primarily for professional ironing machines of large size, it may also be applied with equivalent advantages to all types of non-professional ironing devices.

[0002] Steam is used in ironing machines to moisten the fabric to be ironed, in order to ease removal of creases. Steam is led from a steam generator through ducts in a soleplate to openings in the ironing surface of the soleplate, and then to the fabric. The general direction of these passages in the soleplate, and hence the general direction of the outgoing steam, is usually perpendicular to the ironing surface. The steam is thus induced to pass directly through the fabric, the force of which may damage delicate fabrics.

[0003] Therefore there is a need to further develop steam ironing machines, such as presses, to allow for proper ironing of delicate fabrics while reducing the risk of damaging them.

2019/C/EN/22

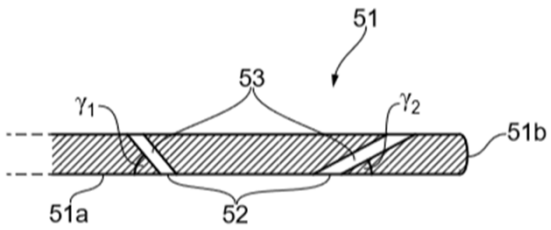

FIG.

STEAM IRONING PRESS WITH TILTED STEAM PASSAGES

- for delicate fabrics
- angle between 15° and 45°, preferably between 20° and 30°

READING ANNEX 5 (I)

CLAIM 1	TECHNICAL EFFECTS AND DEFINITIONS	Annex 5
Ironing device comprising	press or hand iron (iron), dry irons or steam irons	steam ironing machine such as a steam ironing press (par. [0001])
an aluminium soleplate (1)	DEF: soleplate = baseplate DEF: aluminium is a low density material TE: allows production of lightweight ironing devices	
coated on its ironing side with a Kera type layer,	DEF: coating = layer Kera type coating e.g. KeraTix, KeraSi or KeraMa TE: protects against deterioration, easily applied to aluminium	
the Kera type layer being a KeraMa layer	TE: improves gliding	
or a KeraSi layer		

READING ANNEX 5 (II)

CLAIM 2	TECHNICAL EFFECTS AND DEFINITIONS	Annex 5
a steam iron		steam ironing machine such as a steam ironing press (par. [0001])
wherein the coating on the ironing side of the soleplate (1) comprises, starting from the soleplate (1) in this order, a Yur56 layer	TE: improves adhesion aluminium/Kera type layer	
and a KeraMa layer as the Kera type layer.	TE: improves gliding	

CLAIM 3	TECHNICAL EFFECTS AND DEFINITIONS	Annex 5
the soleplate (1) comprises steam outlets (2)	DEF: steam outlets = steam nozzles	soleplate with steam outlets (par. [0004])
and grooves (3) starting from the steam outlets (2) to distribute the steam,	DEF: grooves = open channels TE: uniform distribution of steam over fabric, integrity of delicate fabrics maintained	
and wherein the grooves (3) are obtainable by low-pressure die casting and forced-air cooling.	DEF: low pressure die casting = filling the mould by means of an overpressure of 0.5 bar TE: low pressure die casting easily implemented	

READING ANNEX 5 (III)

CLAIM 4	TECHNICAL EFFECTS AND DEFINITIONS	Annex 5
Steam iron		steam ironing machine such as a steam ironing press (par. [0001])
with an internal water tank	domestic use - small capacity	
and a soleplate (11) with steam outlets (12),	DEF: soleplate = baseplate DEF: steam outlets = steam nozzles	soleplate with steam outlets (par. [0004])
wherein the soleplate (11) comprises a region (14) at the tip of the soleplate (11) with a high density of steam outlets (12) and a region (15) at the back of the soleplate (11) devoid of steam outlets.	DEF: high density = at least 5 outlets per 10 square cm TE: efficient use of steam	

READING ANNEX 5 (IV)

CLAIM 5	TECHNICAL EFFECTS AND DEFINITIONS	Annex 5
the steam outlets (12) are part of steam dispensing ducts		passages extending through soleplate (par. [0004])
each having a longitudinal axis inclined at an angle of between 25° and 35° with respect to the ironing surface of the soleplate (11).	TE: steam partly flows along surface of fabric; avoid damaging delicate fabrics	15°- 45°, preferably 20°- 30° (par. [0005]) same TE (par. [0004])

CLAIM 6	TECHNICAL EFFECTS AND DEFINITIONS	Annex 5
the region (15) at the back of the soleplate (11) extends at least 4 cm along the longitudinal axis (XX') of the soleplate (11)	TE: speeds up the ironing process at a surprising degree	

CLAIM 7	TECHNICAL EFFECTS AND DEFINITIONS	Annex 5
an opening in the back of the iron through which the water tank can be filled.	TE: opening can be made bigger, easier refilling of the water tank	

ANNEX 6

(19) European Patent Office
(12) European Patent Application

(21) Application number:	05270008.5
(11) Publication number:	EP 1 568 600 A1
(22) Date of filing:	14 April 2005
(30) Priority:	16 April 2004 GB 0408333
(43) Date of Publication:	19 October 2005
(51) Int. Cl.:	D06F75/14
(71) Applicant:	HomeClean SA
(72) Inventor:	Lury, Alison
(74) Representative:	Hasse, Ella
(84) Designated Contracting States:	BE DE FR GB

Steam iron with internal water reservoir

[0001] Use of steam has been a major improvement in ironing devices. Dry irons are of simple design but are not very efficient. Steam irons are of a different and much more sophisticated design. Additional functions relating to steam production and distribution as well as constraints linked to the combination of steam and high temperature necessarily result in an entirely new type of iron.

[0002] The present invention relates to steam irons for domestic use, comprising an internal reservoir for containing the water which is transformed into steam by heating. A drawback of such irons is the frequent need to fill the reservoir.

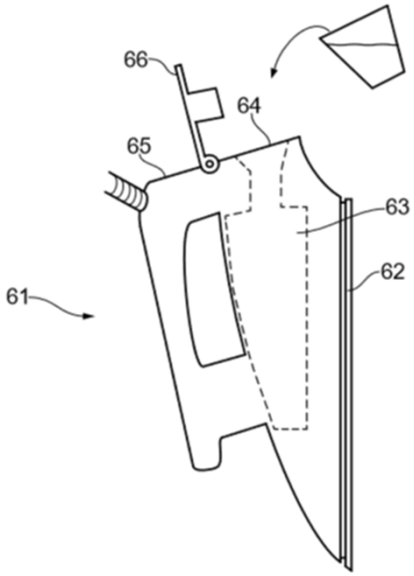

FIG.

STEAM IRON WITH INTERNAL WATER RESERVOIR

- opening at the back, can be made bigger (fill the water reservoir made easier)
- soleplate made of composite material PRe2000, can not be coated

READING ANNEX 6 (I)

CLAIM 1	TECHNICAL EFFECTS AND DEFINITIONS	Annex 6
Ironing device comprising	press or hand iron (iron), dry irons or steam irons	steam iron (par. [0002])
an aluminium soleplate (1)	DEF: soleplate = baseplate DEF: aluminium is a low density material TE: allows production of lightweight ironing devices	composite material PreX2000 (par. [0006])
coated on its ironing side with a Kera type layer,	DEF: coating = layer Kera type coating e.g. KeraTix, KeraSi or KeraMa TE: protects against deterioration, easily applied to aluminium	cannot be coated (par. [0006])
the Kera type layer being a KeraMa layer	TE: improves gliding	
or a KeraSi layer		

READING ANNEX 6 (II)

CLAIM 2	TECHNICAL EFFECTS AND DEFINITIONS	Annex 6
a steam iron		steam iron (par. [0002])
wherein the coating on the ironing side of the soleplate (1) comprises, starting from the soleplate (1) in this order, a Yur56 layer	TE: improves adhesion aluminium/Kera type layer	
and a KeraMa layer as the Kera type layer.	TE: improves gliding	

CLAIM 3	TECHNICAL EFFECTS AND DEFINITIONS	Annex 6
the soleplate (1) comprises steam outlets (2)	DEF: steam outlets = steam nozzles	soleplate 62 with steam outlets (par. [0007])
and grooves (3) starting from the steam outlets (2) to distribute the steam,	DEF: grooves = open channels TE: uniform distribution of steam over fabric, integrity of delicate fabrics maintained	
and wherein the grooves (3) are obtainable by low-pressure die casting and forced-air cooling.	DEF: low pressure die casting = filling the mould by means of an overpressure of 0.5 bar TE: low pressure die casting easily implemented	

READING ANNEX 6 (III)

CLAIM 4	TECHNICAL EFFECTS AND DEFINITIONS	Annex 6
Steam iron		steam iron (par. [0002])
with an internal water tank	domestic use - small capacity	comprising internal reservoir for containing water (par. [0002]), water reservoir 63
and a soleplate (11) with steam outlets (12),	DEF: soleplate = baseplate DEF: steam outlets = steam nozzles	soleplate 62 with steam outlets (par. [0007])
wherein the soleplate (11) comprises a region (14) at the tip of the soleplate (11) with a high density of steam outlets (12) and a region (15) at the back of the soleplate (11) devoid of steam outlets.	DEF: high density = at least 5 outlets per 10 square cm TE: efficient use of steam	

READING ANNEX 6 (IV)

CLAIM 5	TECHNICAL EFFECTS AND DEFINITIONS	Annex 6
the steam outlets (12) are part of steam dispensing ducts		
each having a longitudinal axis inclined at an angle of between 25° and 35° with respect to the ironing surface of the soleplate (11).	TE: steam partly flows along surface of fabric; avoid damaging delicate fabrics	

CLAIM 6	TECHNICAL EFFECTS AND DEFINITIONS	Annex 6
the region (15) at the back of the soleplate (11) extends at least 4 cm along the longitudinal axis (XX') of the soleplate (11)	TE: speeds up the ironing process at a surprising degree	

CLAIM 7	TECHNICAL EFFECTS AND DEFINITIONS	Annex 6
an opening in the back of the iron through which the water tank can be filled.	TE: opening can be made bigger, easier refilling of the water tank	opening at the back of the iron connected to a water reservoir (Fig, par. [0005] and [0007]) same TE (par. [0005])

ATTACK(S) TO CLAIM OBJECT I (KMa)

CLAIM OBJECT 1 (KeraMa)	TECHNICAL EFFECTS AND DEFINITIONS	Annex 2	Annex 3	Annex 4		Annex 5	Annex 6
Ironing device comprising	press or hand iron (iron), dry irons or steam irons	steam iron	NOT USABLE	dry iron	dry iron	steam press	steam iron
an aluminium soleplate (1)	DEF: soleplate = baseplate DEF: aluminium is a low density material TE: allows production of lightweight ironing devices	low density material same TE		aluminium	Medur alloy, essential		composite material PreX2000
coated on its ironing side with a Kera type layer,	DEF: coating = layer Kera type coating e.g. KeraTix, KeraSi or KeraMa TE: protects against deterioration	YES		YES same TE	YES same TE		cannot be coated
the Kera type layer being a KeraMa layer	TE: improves gliding	KeraTix, aestethic effect		KeraMa same TE	KeraSi same TE not comp. with steam		

ATTACK(S) TO CLAIM OBJECT I (KSi)

CLAIM OBJECT 1 (KeraSi)	TECHNICAL EFFECTS AND DEFINITIONS	Annex 2	Annex 3	Annex 4		Annex 5	Annex 6
Ironing device comprising	press or hand iron (iron), dry irons or steam irons	steam iron	NOT USABLE	dry iron	dry iron	steam press	steam iron
an aluminium soleplate (1)	DEF: soleplate = baseplate DEF: aluminium is a low density material TE: allows production of lightweight ironing devices	low density material same TE		aluminium	Medur alloy, essential		composite material PreX2000
coated on its ironing side with a Kera type layer,	DEF: coating = layer Kera type coating e.g. KeraTix, KeraSi or KeraMa TE: protects against deterioration	YES		YES same TE	YES same TE		cannot be coated
the Kera type layer being a KeraSi layer		KeraTix, aestethic effect		KeraMa TE: improves gliding	KeraSi same TE not comp. with steam		

CPA

ATTACK(S) TO CLAIM OBJECT I+2 (I)

CLAIM OBJECT 1+2	TECHNICAL EFFECTS	Annex 2	Annex 3	Annex 4		Annex 5	Annex 6
Ironing device comprising		steam iron		dry iron	dry iron	steam press	steam iron
an aluminium soleplate (1)	TE: allows production of lightweight ironing devices	low density material		aluminium	Medur alloy, essential		composite material PreX2000
coated on its ironing side with a Kera type layer,	TE: protects against deterioration	YES		YES same TE	YES same TE		cannot be coated
the Kera type layer being a KeraMa layer	TE: improves gliding	KeraTix, aestethic effect	NOT USABLE ?	KeraMa same TE	KeraSi same TE not comp. with steam	?	
a steam iron		steam iron		dry iron	dry iron	steam press	steam iron
the coating on the ironing side of the soleplate (1) comprises a Yur56 layer	TE: improves adhesion aluminium/Kera type layer	Yur56		Yur56, same TE	Yur74 not comp. with Al		
and a KeraMa layer as the Kera type layer.	TE: improves gliding	KeraTix, aestethic effect		KeraMa same TE	KeraSi same TE not comp. with steam		

ATTACK(S) TO CLAIM OBJECT I+2 (II)

CLAIM OBJECT 1+2	TECHNICAL EFFECTS	Annex 2	Annex 3	Annex 4		Annex 5	Annex 6
Ironing device comprising		steam iron		dry iron	dry iron	steam press	steam iron
an aluminium soleplate (1)	TE: allows production of lightweight ironing devices	low density material	→	aluminium	Medur alloy, essential		composite material PreX2000
coated on its ironing side with a Kera type layer,	TE: protects against deterioration	YES	NOT USABLE	YES same TE	YES same TE		cannot be coated
the Kera type layer being a KeraMa layer	TE: improves gliding	KeraTix, aesthetic effect	→	KeraMa same TE	KeraSi same TE not comp. with steam		
a steam iron		steam iron		dry iron	dry iron	steam press	steam iron
the coating on the ironing side of the soleplate (1) comprises a Yur56 layer	TE: improves adhesion aluminium/Kera type layer	Yur56		Yur56, same TE	Yur74 not comp. with Al		
and a KeraMa layer as the Kera type layer.	TE: improves gliding	KeraTix, aestethic effect	→	KeraMa same TE	KeraSi same TE not comp. with steam		

ATTACK(S) TO CLAIM OBJECT I+2 (III)

CLAIM OBJECT 1+2	TECHNICAL EFFECTS	Annex 4		Annex 6
Ironing device comprising		dry iron		steam iron
an aluminium soleplate (1)	TE: allows production of lightweight ironing devices	aluminium	?	composite material PreX2000
coated on its ironing side with a Kera type layer,	TE: protects against deterioration	YES same TE	←	cannot be coated
the Kera type layer being a KeraMa layer	TE: improves gliding	KeraMa same TE		
a steam iron		dry iron		steam iron
the coating on the ironing side of the soleplate (1) comprises a Yur56 layer	TE: improves adhesion aluminium/Kera type layer	Yur56, same TE		
and a KeraMa layer as the Kera type layer.	TE: improves gliding	KeraMa same TE	? ←	

ATTACK(S) TO CLAIM OBJECT 1+2+3

CLAIM OBJECT 1+2+3	TECHNICAL EFFECTS	Annex 2	Annex 3
Annex 2 + Annex 4 (first test series) - partial problems			
the soleplate (1) comprises steam outlets (2)		YES	NOT USABLE
and grooves (3) starting from the steam outlets (2) to distribute the steam,	TE: uniform distribution of steam over fabric, integrity of delicate fabrics maintained	YES **same TE**	
and wherein the grooves (3) are **obtainable** by low pressure die casting and forced-air cooling.	TE: low pressure die casting easily implemented	counterpressure die casting at 4 bars followed by forced air-cooling	counterpressure die casting at up to 10 bars and low pressure die-casting have been available for some years, both followed by air-forced cooling. Microstructure of metal determined only by forced air-cooling

product-by-process

not distinguishing feature!

ATTACK(S) TO CLAIM OBJECT 4 (I)

CLAIM OBJECT 4	Annex 2	Annex 3	Annex 4		Annex 5	Annex 6
Steam iron	steam iron	NOT USABLE	dry iron		steam press	steam iron
with an internal water tank	external water tank to remove weight					YES
and a soleplate (11) with steam outlets (12),	YES				YES	YES
wherein the soleplate (11) comprises a region (14) at the tip of the soleplate (11) with a high density of steam outlets (12) and a region (15) at the back of the soleplate (11) devoid of steam outlets.	YES **same TE**					

CPA?

ATTACK(S) TO CLAIM OBJECT 4 (II)

CLAIM OBJECT 4	Annex 2	Annex 6
Steam iron	steam iron	steam iron
with an internal water tank	external water tank to remove weight	YES
and a soleplate (11) with steam outlets (12),	YES	YES
wherein the soleplate (11) comprises a region (14) at the tip of the soleplate (11) with a high density of steam outlets (12) and a region (15) at the back of the soleplate (11) devoid of steam outlets.	YES **same TE**	

CLAIM OBJECT 4	Annex 2	Annex 6
Steam iron	steam iron	steam iron
with an internal water tank	external water tank to remove weight	YES
and a soleplate (11) with steam outlets (12),	YES	YES
wherein the soleplate (11) comprises a region (14) at the tip of the soleplate (11) with a high density of steam outlets (12) and a region (15) at the back of the soleplate (11) devoid of steam outlets.	YES **same TE**	

ATTACK(S) TO CLAIM OBJECT 4+5

CLAIM OBJECT 4+5	Annex 2	Annex 3	Annex 4		Annex 5	Annex 6
Steam iron	steam iron		dry iron		steam press	steam iron
with an internal water tank	external water tank to remove weight	NOT USABLE				YES
and a soleplate (11) with steam outlets (12),	YES				YES	YES
wherein the soleplate (11) comprises a region (14) at the tip of the soleplate (11) with a high density of steam outlets (12) and a region (15) at the back of the soleplate (11) devoid of steam outlets.	YES **same TE**					
the steam outlets (12) are part of steam dispensing ducts					YES	
each having a longitudinal axis inclined at an angle of between 25° and 35° with respect to the ironing surface of the soleplate (11).					YES **same TE**	

ATTACK(S) TO CLAIM OBJECT 4+6

CLAIM OBJECT 4+6	Annex 2	Annex 3	Annex 4	Annex 5	Annex 6
Steam iron	steam iron	YES	dry iron	steam press	steam iron
with an internal water tank	external water tank to remove weight	YES			YES
and a soleplate (11) with steam outlets (12),	YES	YES		YES	YES
wherein the soleplate (11) comprises a region (14) at the tip of the soleplate (11) with a high density of steam outlets (12) and a region (15) at the back of the soleplate (11) devoid of steam outlets.	YES same TE	YES TE: better moistening of heavy fabrics			
the region (15) at the back of the soleplate (11) extends at least 4 cm along the longitudinal axis (XX') of the soleplate (11)		YES TE: outstandingly effective on denim			

ATTACK(S) TO CLAIM OBJECT 4+6+7 (I)

CLAIM OBJECT 4+6+7	Annex 2	Annex 3	Annex 4		Annex 5	Annex 6
Steam iron	steam iron	YES	dry iron		steam press	steam iron
with an internal water tank	external water tank to remove weight	YES				YES
and a soleplate (11) with steam outlets (12),	YES	YES			YES	YES
wherein the soleplate (11) comprises a region (14) at the tip of the soleplate (11) with a high density of steam outlets (12) and a region (15) at the back of the soleplate (11) devoid of steam outlets.	YES same TE	YES TE: better moistening of heavy fabrics				
the region (15) at the back of the soleplate (11) extends at least 4 cm along the longitudinal axis (XX') of the soleplate (11)		YES TE: outstandingly effective on denim				
an opening in the back of the iron through which the water tank can be filled.						YES same TE

ATTACK(S) TO CLAIM OBJECT 4+6+7 (II)

CLAIM OBJECT 4+6+7	Annex 2	Annex 3	Annex 4	Annex 5	Annex 6
Steam iron	steam iron	YES	dry iron	steam press	steam iron
with an internal water tank	external water tank to remove weight	YES			YES
and a soleplate (11) with steam outlets (12),	YES	YES		YES	YES
wherein the soleplate (11) comprises a region (14) at the tip of the soleplate (11) with a high density of steam outlets (12) and a region (15) at the back of the soleplate (11) devoid of steam outlets.	YES same TE	YES TE: better moistening of heavy fabrics			
the region (15) at the back of the soleplate (11) extends at least 4 cm along the longitudinal axis (XX') of the soleplate (11)		YES TE: outstandingly effective on denim			
an opening in the back of the iron through which the water tank can be filled.					YES same TE

DETERMINE ATTACKS (II)

CLAIM OBJECTS	Art. 123(2)	Art. 54(2)	Art. 54(3)	Art. 56
1 (alt 1)		Annex 4 – test series 1		
1 (alt 2)				Annex 4 – test series 1+II
1 (alt 3)	X			
1+2				Annex 2 + Annex 4 (partial problems)
1+2+3				Annex 2 + Annex 4 (partial problems)
4				Annex 6 + Annex 2
4+5				Annex 6 + Annex 2 + Annex 5 (partial problems)
4+6		Annex 3		
4+6+7				Annex 3 + Annex 6

AND NOW …
LET'S WRITE THE ATTACKS!